SIEMENS

www.siemens.com/mi

Symbia E and S

System Specifications

Answers for life.

Symbia E: Work with confidence.

What does it mean to work with confidence? It is clarity—not only image clarity but the clarity of mind that can be obtained from viewing images that offer high measures of clinical certainty. Symbia™ SPECT helps ensure this clarity through its advanced HD detector, innovative bed design, BiCORE™ collimators with AUTOFORM® technology, Flash reconstruction and attenuation correction. Additionally, Siemens global service network provides the reliability needed to operate with confidence.

Symbia S: Accelerate your workflow.

Operational costs and workflow. Diagnosis and treatment. Time affects every aspect of daily imaging—from patients' well-being to staff efficiency. Designed with these needs in mind, Symbia's automation and fast image acquisition enable staff to perform at imaging speeds that were previously unattainable—which potentially leads to faster patient diagnosis and treatment and supports increased patient volumes.

Features

Gantry Dimensions	Symbia E	Symbia S
Height	193.0 cm (6 ft 4 in)	225 cm (7 ft 4.7 in)
Width	167.6 cm (5 ft 6 in)	225 cm (7 ft 4.7 in)
Depth	159.4 cm (5 ft 2.75 in)	193 cm (6 ft 4 in)
Axis of Rotation (from Floor)	99.0 cm (3 ft 3 in)	104 cm (3 ft 5 in)
Weight*	1,071 kg (2,363 lbs) single detector 1,579 kg (3,482 lbs) dual detector	2,369 kg (5,224 lbs)
Min./Max. Patient Opening (HE Coll)	9.0 cm (3.5 in)/62.0 cm (24.4 in)	12 cm (4.7 in)/65.4 cm (25.7 in)
Min./Max. Patient Opening (LEHR Coll)	14.0 cm (5.5 in)/67.0 cm (26.4 in)	19.2 cm (7.6 in)/72.6 cm (28.6 in)
Patient Positioning Monitor	38.1 cm (15 in) flat panel color LCD display	38.1 cm (15 in) flat panel color LCD display
Tunnel Opening	71x86 cm (28x34 in)	102x78 cm (40.2x30.7 in)
Tunnel Length	59 cm (23 in)	44 cm (17 in)
SPECT Motions	**Symbia E**	**Symbia S**
Average Autocontour Distance	1.1 cm (0.45 in)	1.1 cm (0.45 in)
Max. Radial and Lateral	120 cm/min (47.2 in/min)	72 cm/min (28.3 in/min)
Max. Lateral Position Left/Right	5.1 cm (2 in)/22.9 cm (9 in)	37.5 cm (14.7 in)/10 cm (4 in)
Max. Clockwise (CW)/Counter-Clock-Wise (CCW) Rotation Detector 1	440°/30°	405°/-135°
Ring Rotation Range	470°	540°
Rotational Uniformity	Yes	Yes
Rotational Accuracy	0.1°	0.1°
Rotational Speed	0.33-1.5 RPM	0.03-3.0 RPM
Center of Rotation	≤0.25 pixel (64x64 matrix)	≤0.25 pixel (64x64 matrix)
Max. Caudal Tilt	+90°/-20°	+16°/-16°

* Gantry weight: NM gantry 2,374 kg (5,224 lbs) + CT gantry 1,132 kg (2,490 lbs)

SPECT Specifications

Patient Bed	Symbia E	Symbia S
Width	88.9 cm (35.4 in)	81.9 cm (32.2 in)
Length	251.5 cm (8 ft 3 in)	248.0 cm (8 ft 1.6 in)
Weight without Integrated Collimator Changer (ICC)/ Automated Collimator Changer (ACC)	268 kg (590 lbs)	950 kg (2,096 lbs)
Height	109.2 cm (3 ft 7 in)	112.0 cm (3 ft 8 in)
Vertical Motion Range	48.3-110.5 cm (19-43.5 in)	48.0-112.0 cm (19-44 in)
Vertical Speed	120 cm/min (47.2 in/min) maximum	72 cm/min (28 in/min) maximum
Pallet Material	Aluminum	Aluminum
Pallet Thickness	2.6 mm (0.10 in)	2.6 mm (0.10 in)
Pallet Width	35.6 cm (14 in)	40.0 cm (15.8 in)
Attenuation at 140 keV	<7%	<7%
Max. Patient Weight	180 kg (400 lbs)	227 kg (500 lbs)
Max. Deflection of Patient Pallet	<3.2 mm (<0.125 in) for 92 kg (200 lbs) patient	<2.0 mm (<0.08 in) for 92 kg (200 lbs) patient
Max. Scan Length in Whole-Body Mode	202 cm (6 ft 7.5 in)	200 cm (6 ft 6.7 in)
Horizontal Motion Accuracy	0.4 mm (0.016 in)	0.7 mm (0.03 in)
Min./Max. Horizontal Speed	0.1-240 cm/min (0.040-94.5 in/min)	3-600 cm/min (1.2-236 in/min)
Optional Pallets	**Symbia E**	**Symbia S**
Pediatric		
Material	Carbon fiber composite	Carbon fiber composite
Thickness	0.6 cm (0.25 in)	0.6 cm (0.25 in)
Width	25.4 cm (10 in)	25.4 cm (10 in)
Length	129.5 cm (51 in)	145 cm (57 in)
Weight	6.4 kg (14 lbs)	7.3 kg (16 lbs)
Attenuation at 140 keV	<10%	<10%
Max. Patient Weight	27 kg (60 lbs)	27 kg (60 lbs)
Scintimammography		
Material	Carbon fiber composite	Carbon fiber composite
Thickness	1.6 cm (0.63 in)	1.6 cm (0.63 in)
Width	35.6 cm (14 in)	35.6 cm (14 in)
Length	170.2 cm (67 in)	190.5 cm (75 in)
Weight	5.9 kg (13 lbs)	7.7 kg (17 lbs)
Attenuation at 140 keV	<10%	<10%
Max. Patient Weight	135 kg (300 lbs)	135 kg (300 lbs)

SPECT Specifications

Rear Pallet Support	Symbia E	Symbia S
Width	35.6 cm (14 in)	26.3 cm (10.3 in)
Length	124.5 cm (4 ft 1 in)	104.3 cm (3 ft 5.1 in)
Weight	210 kg (465 lbs)	188.3 kg (415.2 lbs)
ECG Trigger	**Symbia E**	**Symbia S**
Integration	External	Internal (inside patient bed) or external
Framing Modes	Forward or forward/ backward by thirds	Forward or forward/ backward by thirds
Buffered Beat Window	Yes	Yes
Bad Beat Rejection	Yes	Yes
Criteria for Framing Images	Frames/R-R interval	Frames/R-R interval
Beat Acceptance Window	Automatic or manual selection	Automatic or manual selection
Collimator Exchanger Cart	**Symbia E**	**Symbia S**
Height	132.1 cm (4 ft 4 in)	101.4 cm (3 ft 3.9 in)
Width	110.5 cm (2 ft 7.5 in)	82.8 cm (2 ft 8.6 in)
Depth	110.5 cm (2 ft 7.5 in)	120.4 cm (3 ft 11.4 in)
Weight*	120.2 kg (265 lbs)	181.4 kg (400 lbs)
Detector Dimensions	**Symbia E**	**Symbia S**
Field-of-View (FOV)	53.3x38.7 cm (21x15.25 in)	53.3x38.7 cm (21x15.25 in)
Diagonal FOV	65.9 cm (25.9 in)	65.9 cm (25.9 in)
Crystal	**Symbia E**	**Symbia S**
Size	59.1x44.5 cm (23.25x17.5 in)	59.1x44.5 cm (23.25x17.5 in)
Diagonal	73.9 cm (29.1 in)	73.9 cm (29.1 in)
Thickness	9.5 mm (3/8 in) or 15.9 mm (5/8 in)	9.5 mm (3/8 in) or 15.9 mm (5/8 in)
Photomultiplier Tubes	**Symbia E**	**Symbia S**
Total Number	59	59
Diameter	53-7.6 cm (3 in) and 6-5.1 cm (2.4-2 in)	53-7.6 cm (3 in) and 6-5.1 cm (2.4-2 in)
Type	Bialkali high-efficiency box-type dynodes	Bialkali high-efficiency box-type dynodes
Array	Hexagonal	Hexagonal

* For Symbia patient beds with 227 kg (500 lbs) weight limit.

SPECT Specifications

Detector Shielding	Symbia E	Symbia S
Back	9.5 mm (0.375 in)	9.5 mm (0.375 in)
Sides	12.7 mm (0.5 in)	12.7 mm (0.5 in)
Min./Max. in Patient Direction*	27.9/36.4 mm (1.1/1.435 in)	–
Brain Reach**	7.6 cm (3 in)	7.6 cm (3 in)
Detector* **	**3/8″**	**5/8″**
Intrinsic Spatial Resolution		
FWHM in CFOV	≤3.8 mm	≤4.5 mm
FWHM in UFOV	≤3.9 mm	≤4.6 mm
FWTM in CFOV	≤7.5 mm	≤8.7 mm
FWTM in UFOV	≤7.7 mm	≤8.9 mm
Intrinsic Spatial Linearity		
Differential in CFOV	≤0.2 mm	≤0.2 mm
Differential in UFOV	≤0.2 mm	≤0.2 mm
Absolute in CFOV	≤0.4 mm	≤0.5 mm
Absolute in UFOV	≤0.7 mm	≤1.0 mm
Intrinsic Energy Resolution		
FWHM in CFOV	≤9.9%	≤9.9%
Intrinsic Flood Field Uniformity (Uncorrected)		
Differential in CFOV	≤2.5%	≤2.5%
Differential in UFOV	≤2.7%	≤2.7%
Integral in CFOV	≤2.9%	≤2.9%
Integral in UFOV	≤3.7%	≤3.7%
Multiple Window Spatial Registration	≤0.6 mm	≤1.0 mm
Intrinsic Count Rate Performance in Air		
Maximum Count Rate	310 kcps	310 kcps
Intrinsic Spatial Resolution at 75 kcps		
FWHM in UFOV	≤4.1 mm	≤4.6 mm
FWTM in UFOV	≤7.8 mm	≤8.9 mm
Intrinsic Flood Field Uniformity at 75 kcps (Uncorrected)		
Differential in CFOV	≤2.5%	≤2.5%
Differential in UFOV	≤2.7%	≤2.7%
Integral in CFOV	≤2.9%	≤2.9%
Integral in UFOV	≤3.7%	≤3.7%

* For any point on the pallet at maximum 183 cm (6 ft) from the detector while the detector is at 25.4 cm (10 in) radial position.

** Distance from the edge of the detector housing to the edge of the FOV.

*** Values are determined at the manufacturer's facility using methods described in NEMA Standards Publications NU 1-2007 "Performance measurements of Scintillation Cameras." The specialized phantoms and software required to reproduce these measurements are available from Siemens.

SPECT Specifications

Detector with Collimator*	3/8″	5/8″
System Spatial Resolution without Scatter (LEHR at 10 cm)		
FWHM in CFOV	≤7.5 mm	≤7.8 mm
FWTM in CFOV	≤13.6 mm	≤14.9 mm
System Spatial Resolution with Scatter (LEHR at 10 cm)		
FWHM in CFOV	≤8.3 mm	≤8.9 mm
FWTM in CFOV	≤18.6 mm	≤19.5 mm
System Planar Sensitivity (LEHR at 10 cm)		
Absolute	202 cpm/µCi	225 cpm/µCi
System Planar Sensitivity (ME at 10 cm)		
Absolute ^{111}In	430 cpm/µCi	565 cpm/µCi
Detector with Collimator Tomographic*	**3/8″**	**5/8″**
Reconstructed Spatial Resolution without Scatter at 15 cm Radius (LEHR)	Filtered Back Projection	
Central Transaxial	≤10.2 mm	–
Central Axial	≤10.8 mm	–
Peripheral Radial	≤9.8 mm	–
Peripheral Tangential	≤8.4 mm	–
Peripheral Axial	≤9.0 mm	–
Reconstructed Spatial Resolution without Scatter at 15 cm Radius (LEHR)	Flash 3D Iterative Reconstruction	
Central Transaxial	≤4.4 mm	–
Central Axial	≤4.4 mm	–
Peripheral Radial	≤4.0 mm	–
Peripheral Tangential	≤3.9 mm	–
Peripheral Axial	≤4.2 mm	–
Reconstructed Spatial Resolution with Scatter (LEHR)	Filtered Back Projection	
Center	≤10.7 mm	≤11.5 mm
Radial	≤10.9 mm	≤12.0 mm
Tangential	≤7.9 mm	≤8.8 mm
Reconstructed Spatial Resolution with Scatter (LEHR)	Flash 3D Iterative Reconstruction	
Center	≤5.8 mm	–
Radial	≤5.0 mm	–
Tangential	≤4.1 mm	–
System Volume Sensitivity (LEHR)		
UFOV ±7%	12,000 (cts/sec)/(MBq/cm2)	–
Detector-Detector Sensitivity Variation (LEHR, ^{99m}Tc)	≤5.0%	–

* Values are determined at the manufacturer's facility using methods described in NEMA Standards Publications NU 1-2007 "Performance measurements of Scintillation Cameras." The specialized phantoms and software required to reproduce these measurements are available from Siemens.

SPECT Specifications

Detector with Collimator Whole-Body Scanning Specifications	3/8″	5/8″
Whole-Body System Spatial Resolution without Scatter at 10 cm/min Scan Speed (LEHR at 10 cm)		
FWHM Perpendicular	≤7.5 mm	–
FWHM Parallel	≤7.9 mm	–
FWTM Perpendicular	≤14.0 mm	–
FWTM Parallel	≤14.2 mm	–

Collimators	LEHR	LEAP	LEUHR	LEFB	ME	HE	HE	SMART-ZOOM (Symbia S Only)
	Low Energy High Resolution	Low Energy All Purpose	Low Energy Ultra High Resolution	Low Energy Fan Beam	Medium Energy	High Energy Symbia E	High Energy Symbia S	IQ•SPECT
Isotope	^{99m}Tc	^{99m}Tc	^{99m}Tc	^{99m}Tc	^{67}Ga	^{131}I	^{131}I	^{99m}Tc
Hole Shape	Hex	Hex	Hex	Hex	Hex	Hex	Hex	Hex
Number of Holes (x1000)	148	90	146	64	14	8	8	48
Hole Length	24.05 mm	24.05 mm	35.8 mm	35 mm	40.64 mm	50.8 mm	59.7 mm	40.25 mm
Septal Thickness	0.16 mm	0.2 mm	0.13 mm	0.16 mm	1.14 mm	2 mm	2 mm	0.2-0.4 mm
Hole Diameter Across the Flats	1.11 mm	1.45 mm	1.16 mm	1.53 mm	2.94 mm	3.4 mm	4 mm	1.9 mm
Sensitivity at 10 cm*	202 cpm/µCi	330 cpm/µCi	100 cpm/µCi	280 cpm/µCi	275 cpm/µCi	135 cpm/µCi	135 cpm/µCi	285 cpm/µCi**
								810 cpm/µCi at 28 cm**
Geometric Resolution at 10 cm*	6.4 mm	8.3 mm	4.6 mm	6.3 mm	10.8 mm	12.6 mm	13.2 mm	6.95 mm
System Resolution at 10 cm	7.5 mm	9.4 mm	6.0 mm	7.3 mm	12.5 mm	14.5 mm	13.4 mm	7.4 mm***
Septal Penetration	1.5%	1.9%	0.8%	1.0%	1.2%	3.5%	3.5%	N/A
Exit Surface	N/A	N/A	N/A	44.5 cm	N/A	N/A	N/A	52x60 cm
Weight for Symbia E	20.4 kg (45 lbs)	22.1 kg (49 lbs)	25.2 kg (56 lbs)	30.5 kg (67 lbs)	61.8 kg (136 lbs)	111.1 kg (245 lbs)	N/A	N/A
Weight for Symbia S	22.1 kg (48.7 lbs)	22.6 kg (49.8 lbs)	28 kg (61.8 lbs)	28.4 kg (62.5 lbs)	63.5 kg (140.1 lbs)	N/A	124.7 kg (275 lbs)	47.2 kg (104 lbs)

* Values measured in accordance with NEMA Standards Publication NU-1 2007 using 3/8″ crystal.
** Values measured using a 5 cm diameter phantom.
*** Values measured with lines spaced 2 cm apart at the center of the collimator.

SPECT Specifications

Pinhole Collimator*	Isotope		
	^{99m}Tc	^{123}I	^{131}I
Hole Shape	Round	Round	Round
Number of Holes	1	1	1
Cone Aperture	4 mm 6 mm 8 mm	4 mm 6 mm 8 mm	4 mm 6 mm 8 mm
Cone Length	219.3 mm	219.3 mm	219.3 mm
Diameter at Base of Cone (approximate)	220 mm	220 mm	220 mm
Sensitivity at 10 cm with 4 mm	123 cpm/µCi	111 cpm/µCi	67 cpm/µCi
Sensitivity at 10 cm with 6 mm	271 cpm/µCi	243 cpm/µCi	133 cpm/µCi
Sensitivity at 10 cm with 8 mm	478 cpm/µCi	426 cpm/µCi	221 cpm/µCi
Geometric Resolution at 10 cm with 4 mm	6.2 mm	6.3 mm	7.5 mm
Geometric Resolution at 10 cm with 6 mm	9.3 mm	9.3 mm	10.6 mm
Geometric Resolution at 10 cm with 8 mm	12.3 mm	12.4 mm	13.6 mm
System Resolution at 10 cm with 4 mm	6.6 mm	6.6 mm	7.6 mm
System Resolution at 10 cm with 6 mm	9.5 mm	9.5 mm	10.7 mm
System Resolution at 10 cm with 8 mm	12.5 mm	12.5 mm	13.7 mm
Weight for Symbia E	74.3 kg (165 lbs)	74.3 kg (165 lbs)	74.3 kg (165 lbs)
Weight for Symbia S	80.3 kg (177 lbs)	80.3 kg (177 lbs)	80.3 kg (177 lbs)

* Values measured in accordance with NEMA Standards Publication NU-1 2007 using 3/8” crystal.

SPECT Specifications

c.clear Attenuation Correction	Symbia E (Dual Detector Only)	Symbia S
Transmission Source Configuration	Multiple line array (MLA)	N/A
Number of Arrays per System	2	N/A
Number of Line Sources per Array 14 (7 pairs) N/A	14 (7 pairs)	N/A
Transmission Isotope	^{153}Gd	N/A
Transmission Energy	100 keV	N/A
Transmission Activity (Total)	7.1 GBq (192 mCi) per System	N/A
Replenishment Interval	6 months	N/A
Replenishment Activity	4 line sources of 740 MBq (20 mCi)	N/A
Effective Source Life	Effective Source Life 3.5 years	N/A
Shutter Mechanism	(Automatic) Electric (fail-safe)	N/A
Cardiac FOV	53.3x19.7 cm (21x7.75 in)	N/A
Acquisition Type	90° SPECT and gated SPECT	N/A
Acquisition Mode	NCO with pre-scan	N/A
Supported Collimators	LEHR	N/A
^{99m}Tc Protocol	Simultaneous emission/ transmission	N/A
^{201}Tl Protocol	Pseudo-sequential (single rotation)	N/A
Acquisition Matrix	128x128 (no zoom)	N/A
Sampling Size	4.80 mm/pixel	N/A
Reconstruction Method	Flash iterative reconstruction	N/A
Resolution Recovery	Yes (collimator deblurring)	N/A
Transmission Scatter Correction	Yes, 3-window method	N/A
Emission Scatter Correction No N/A	No	N/A
Supported Patient Weight	Up to 181 kg (400 lbs)	N/A

Symbia E Minimum Room Size

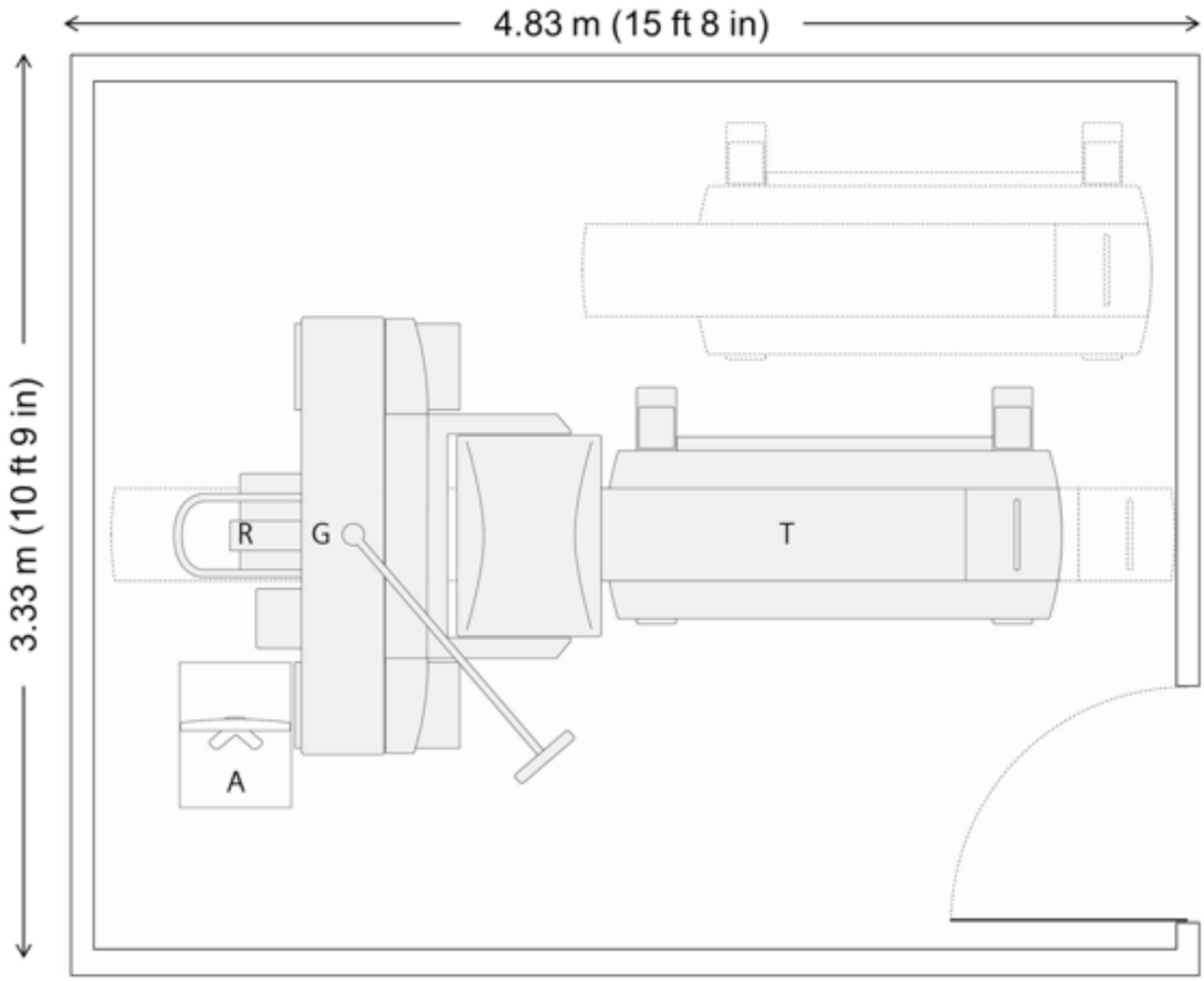

Room Size	3.33x4.83 m (10 ft 9 inx15 ft 8 in)
Ceiling Height	2.13 m (6 ft 9 in)

Example layout. Please request site-specific plans for your project.

Symbia E Installation Specifications

Label	Item Name	Weight	Heat Output
G	Symbia E Gantry	Single 1,071 kg (2,363 lbs) Dual 1,579 kg (3,482 lbs)	4,781 BTU/h, 1.4 kW
T	Symbia E Imaging Table	267 kg (590 lbs)	–
R	Symbia E Rear PHS	210 kg (465 lbs)	–
A	Acquisition Computers	–	956 BTU/h, 0.28 kW
Power Requirements			
SPECT Input Voltage	Single-Phase 200/208/220/230/240 VAC~ 50/60Hz		
Electrical Supply	Single phase 200/208/220/230/240 V, 50/60 Hz, 2.9 kVA		
Environment			
Floor Loading*	0.073 kg/sq cm (1 lbs/sq in) maximum under the floorplate		
Ambient Operating Temperature	60-95° F (15.5-35° C)		
Allowable Temperature Change	4.4° C (8° F) per hour		
Humidity	20-80% non-condensing		
Allowable Humidity Change	5%/hour		
Maximum Altitude	2,438 m (8,000 ft)		
Heat Dissipation**	7,368 BTU/hr		

* Floor loading based on utilization of a floor plate.

** Includes gantry, detectors, patient bed, acquisition workstation, LCD monitor, PPM and UPS. Values in idle mode and operating mode would produce higher values.

Symbia S Minimum Room Size

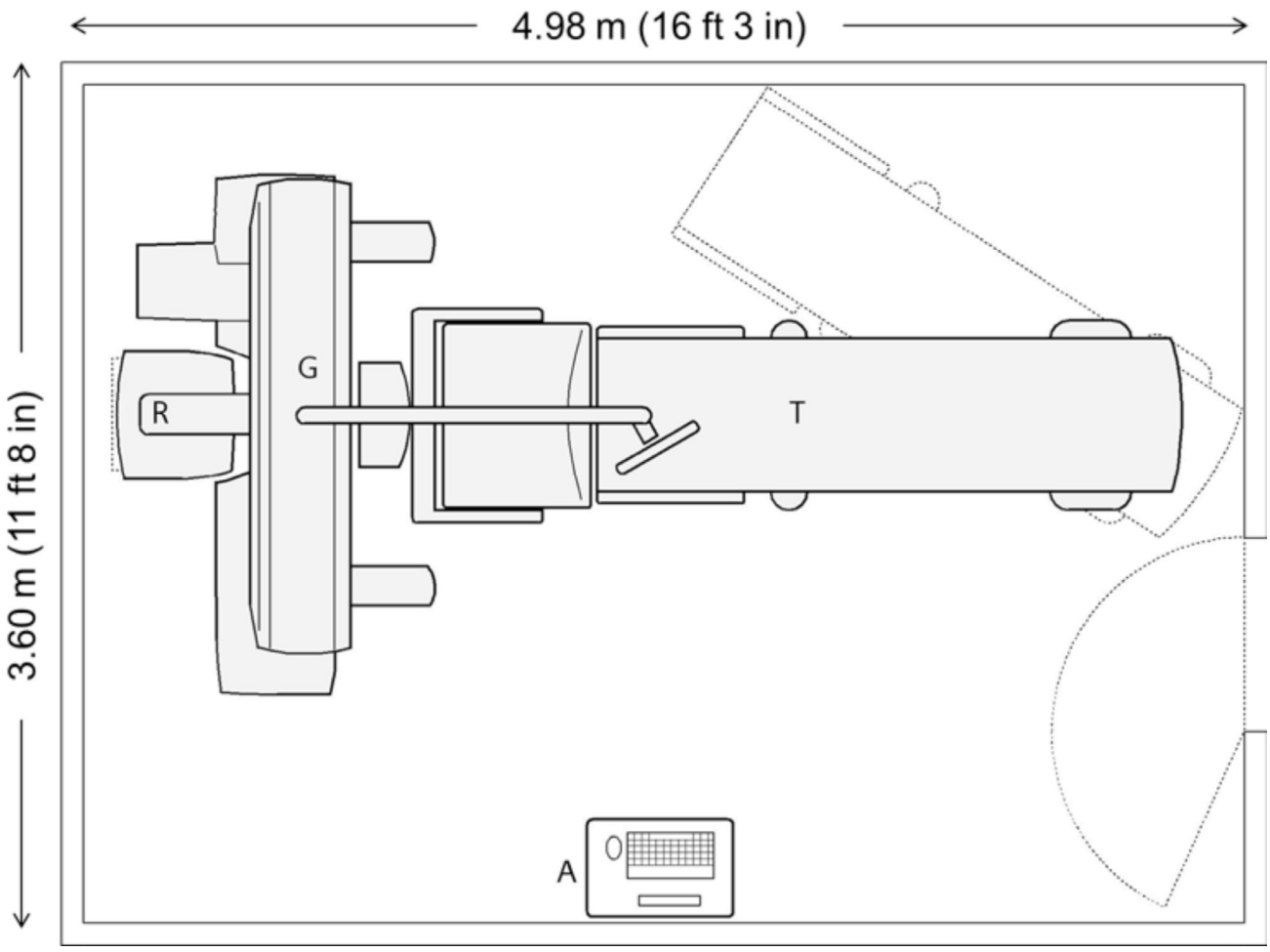

Room Size	3.60 m (11 ft 8 in)x4.98 m (16 ft 3 in)
Ceiling Height	2.44 m (8 ft 0 in)
Hung Ceiling Height	2.29 m (7 ft 5 in)

Example layout. Please request site-specific plans for your project.

Symbia S Installation Specifications

Label	Item Name	Weight	Heat Output
G	Symbia S Gantry	2,369 kg (5,224 lbs)	3,400 BTU/h, 1.0 kW
T	Symbia S Imaging Table	950 kg (2,096 lbs)	–
R	Symbia S Rear PHS	188.3 kg (415.2 lbs)	–
A	Acquisition Computers	–	1,000 BTU/h, 0.3 kW
Power Requirements			
SPECT Input Voltage	Single-Phase 200/208/220/230/240 VAC~ 50/60Hz		
Electrical Supply	Single phase 200/208/220/230/240 V, 50/60 Hz, 3.0 kVA		
Environment			
Floor Loading	3.37 kg/sq cm (48 lbs/sq in) maximum under the gantry		
Ambient Operating Temperature	18-30° C (64-86° F)		
Allowable Temperature Change	4.4° C (8° F) per hour		
Humidity	20-80% non-condensing		
Allowable Humidity Change	5%/hour		
Maximum Altitude	2,438 m (8,000 ft)		
Heat Dissipation*	6,500 BTU/hr		

* Includes gantry, detectors, patient bed, acquisition workstation, LCD monitor, PPM and UPS.
Values in idle mode and operating mode would produce higher values.

Global Siemens Headquarters
Siemens AG
Wittelsbacherplatz 2
80333 Muenchen
Germany

Global Siemens Healthcare Headquarters
Siemens AG
Healthcare Sector
Henkestrasse 127
91052 Erlangen
Germany
Telephone: +49 9131 84-0
www.siemens.com/healthcare

Global Business Unit Address
Siemens Medical Solutions USA, Inc.
Molecular Imaging
2501 N. Barrington Road
Hoffman Estates, IL 60192
USA
Telephone: +1 847 304 7700
www.siemens.com/mi

Legal Manufacturer
Siemens Medical Solutions USA, Inc.
Molecular Imaging
2501 N. Barrington Road
Hoffman Estates, IL 60192
USA
Telephone: +1 847 304 7700
www.siemens.com/mi

www.siemens.com/mi